Cut out in the right size:
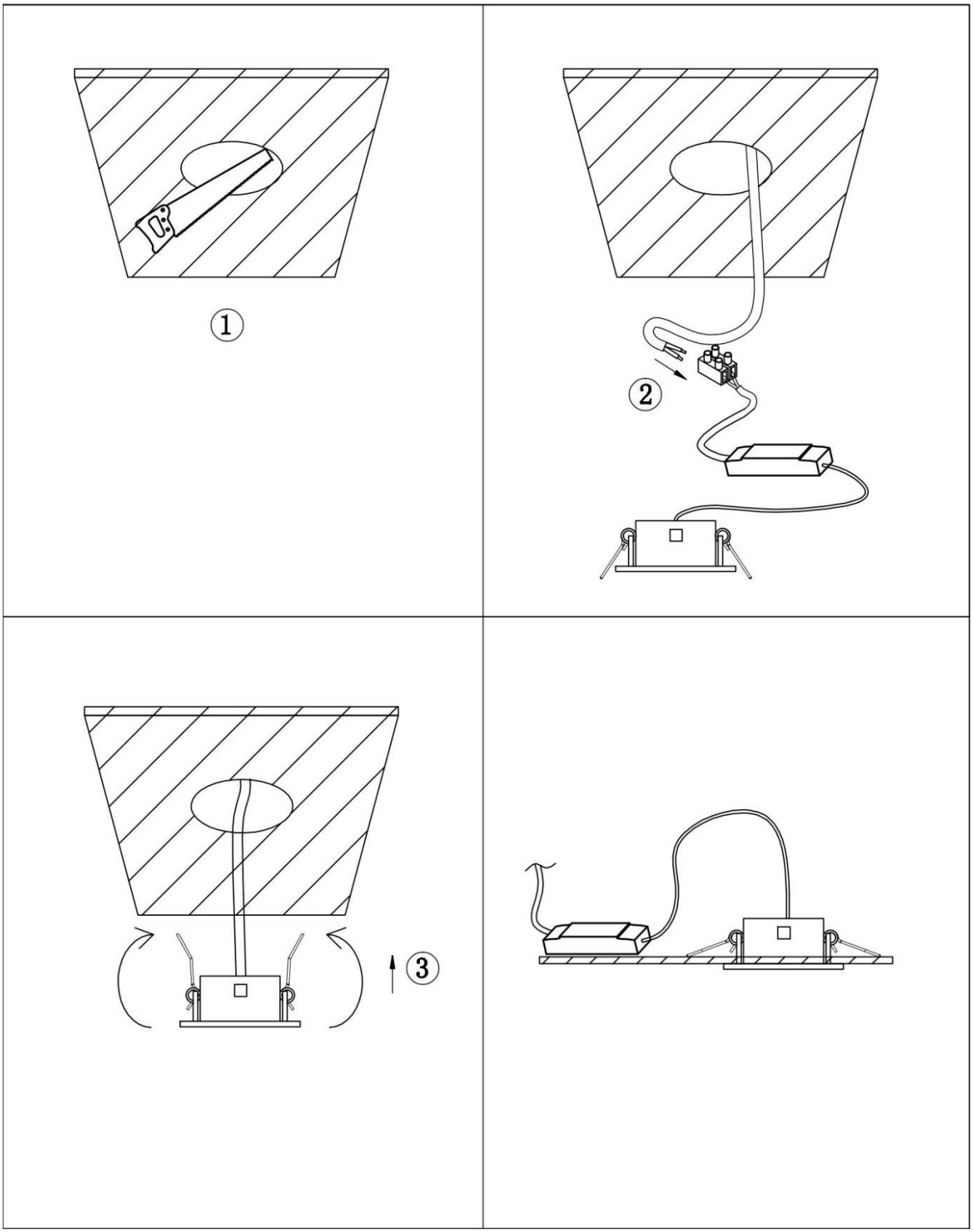
86.D002.1***.** 75mm / 75*75mm